Steam Era Models
C/- P.O. Rhyll, Victoria, 3923.

VICTORIAN RAILWAYS WOODEN U VAN/HD PLANT TRUCK

Prototype Notes

During 1895-97 167 ventilated box vans, featuring wooden, louvred bodies were constructed by Newport workshops and by contractors, The Braybrook Implement Co. and Robinson and Co. Intended for carriage of perishable goods they were coded U and numbered from 113 to 280, excluding 278. Auto' coupled steel underframes were fitted during the early 1930's but by the 1950's the bodies, which had always required a high level of maintenance, were deteriorating. 1953/54 saw 25 supply their underframes for use under P explosives vans, then being constructed. Further P vans were built on the underframes of wooden U vans, whose bodies had been condemned, during 1958/59. Forty two of the remaining "Robinson Pattern" U vans were recoded HD during 1957/58, for use as Way and Works Plant Trucks. They lasted in this capacity into the 1970's, with steady attrition from 1971 to 1980.

Model illustrated has been fitted with handbrake, shunter's steps and couplers (not included).

Assembly

It is recommended that this kit be assembled with a liquid solvent (MEK or Testors etc...). Each part is attached to the runner by a small "gate". When removing a part, cut close to the runner, then carefully trim and file the gate to the part. Leave parts on the runners until called for in the instructions, and **do not** twist them off, as they may be damaged.

Cut the length of wire supplied in half and bend a door handle out of each piece. Insert the handle through the hole moulded in the door latch and bend over on the inside face. Secure with "superglue" and/or a scrap of runner cemented over this inner part.

Cement a side to an end to form an L shaped subassembly. The small pins moulded on the back of each part assist with positioning. Make a similar subassembly of the remaining side and end. Cement these two subassemblies together to form an open box.

Assemble the buffers as shown on the exploded view. Hair shirt types may like to devise a method to make them operate. Lesser mortals can cement the parts solid. If cementing the buffers solid it will also be necessary to cut the buffer stems about 2mm shorter.

Figure 1

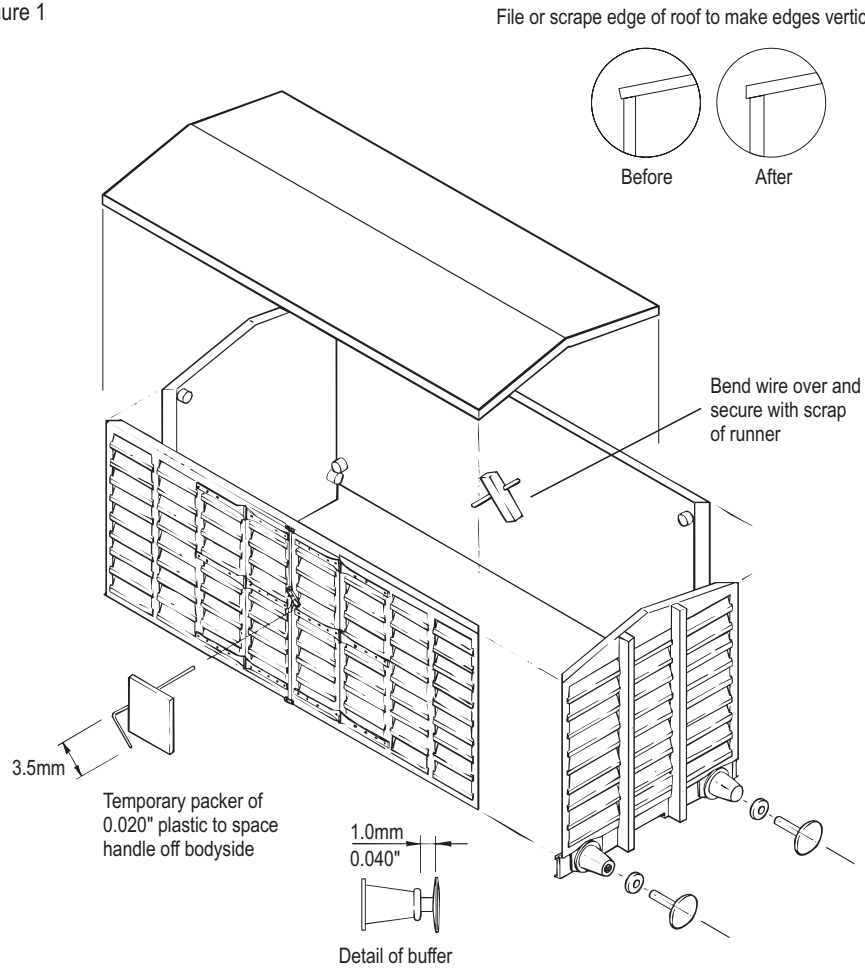

Trim the floor moulding to size, using the step moulded along each edge as a guide. Use a sharp knife and finish off with a large file or the sanding board described below. **Check that the floor is a neat fit in the body before adding the sidesills.**

Remove the draw or slight taper from the top of each sidesill by careful sanding. Glue a piece of 180 grit "Opencote" aluminium oxide sandpaper to a flat piece of wood and rub the top edge of each sidesill over it, using a second block of wood with one edge planed square as a guide. This step will ensure that the sidesills are installed at 90° to the floor. Fit the Delrin bearings into the holes in the axleboxes.

Cement the sidesills to the floor with the wheelsets sandwiched between. Make sure that the back of each sidesill is hard up against the floor structure, that the wheelsets turn freely and that the axles are at 90° to the sidesills. Cement the brake cylinder to the underframe in the location shown in Fig. 2.

Install the assembled underframe in the body so that the lower edges of the sidesills are flush with the bottom edge of each end. Secure with a brush of solvent around the edges of the floor.

A piece of 0.040" polystyrene is supplied for a roof. Carefully scrape or file the edges of the overhanging roof so that they are vertical, rather than perpendicular to the top face. Gently fold this sheet in the centre along the scored line (score to outside of bend) and cement on top of the body. Check that the overhang is even. The score down the centre of the roof will open up, so fill the resulting crack with plastic filler (Milliput or similar) and sand smooth.

Cement the brake shoes to the floor using the lugs moulded on the floor as a guide. Ensure that the brake shoes do not drag on the wheels. Etched brass shunter's steps and handbrake detail is available separately in Steam Era Models Kit E4, which contains sufficient parts for five wagons.

The underframe is designed to accept Kadee #5 or #58 couplers which may be cemented directly to the floor, after first removing the side lugs from the draft gear box. It will also be necessary to push the draft gear box outward. There should be a gap of approx. 1.0mm between the back of the lip on top of the draft box and the face of the headstock.

Figure 2

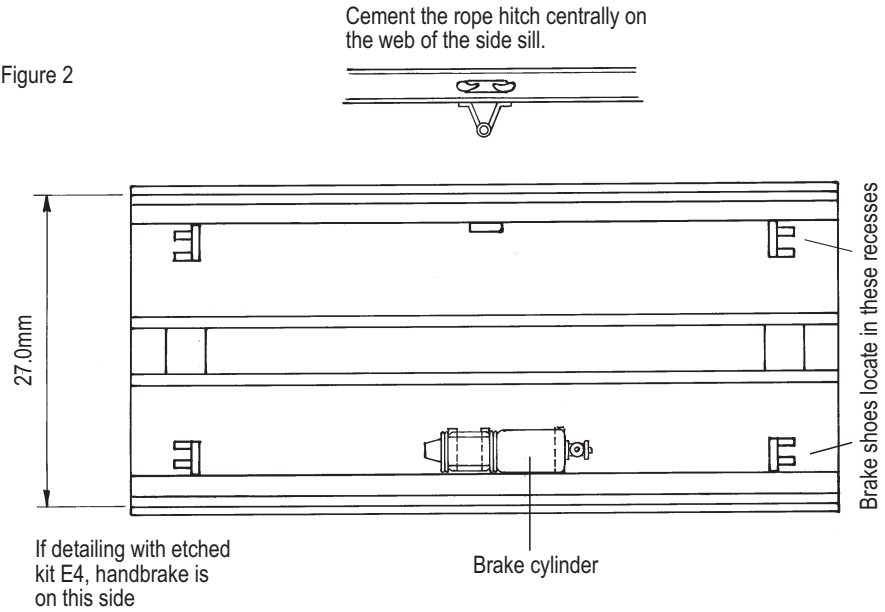

Painting and Decals

The model should be painted overall V.R. wagon red with white lettering. We recommend Steam Era Models V.R. Wagon red spraying enamel. Position the lettering as shown on the diagram below.

For U vans 113-277; substitute U for HD and delete 'WAY WORKS PLANT TRUCK'

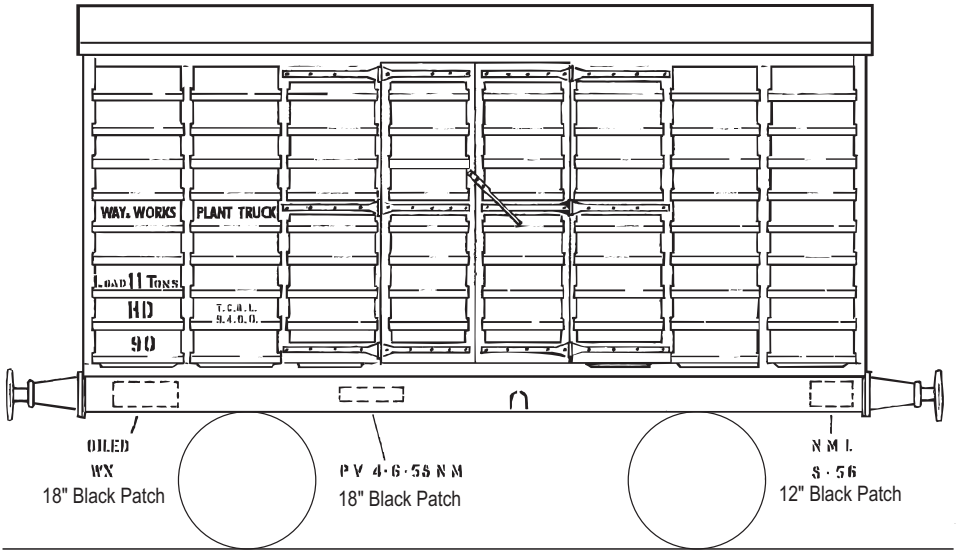

NOTE: There was considerable variation in the placement of lettering on HD wagons. This diagram is typical only. HD vans of this type were numbered 37, 39, 40, 42, 44, 45, 50, 51, 53, 56, 58, 63, 65, 66, 67, 68, 72, 73, 75, 76, 79, 83, 84, 86 - 94, 97, 99, 102, 103, 105, 106, 108, 109.

To Apply Decals

Trim decals close to lettering to remove excess film.

Immerse in water for ten to fifteen seconds, then set aside on a tissue until decal straightens out.

Slide decal into position. If it is necessary to adjust the final position, use a small brush that has been dipped in water.

Use a tissue to soak up excess water.

The use of a decal setting agent such as Solvaset is recommended to assist decals in snuggling down over rivets etc.

A flat finish such as DDV or estapol matt applied to the entire model will give a uniform dull finish.

NOTE: Decals adhere best to a gloss surface.